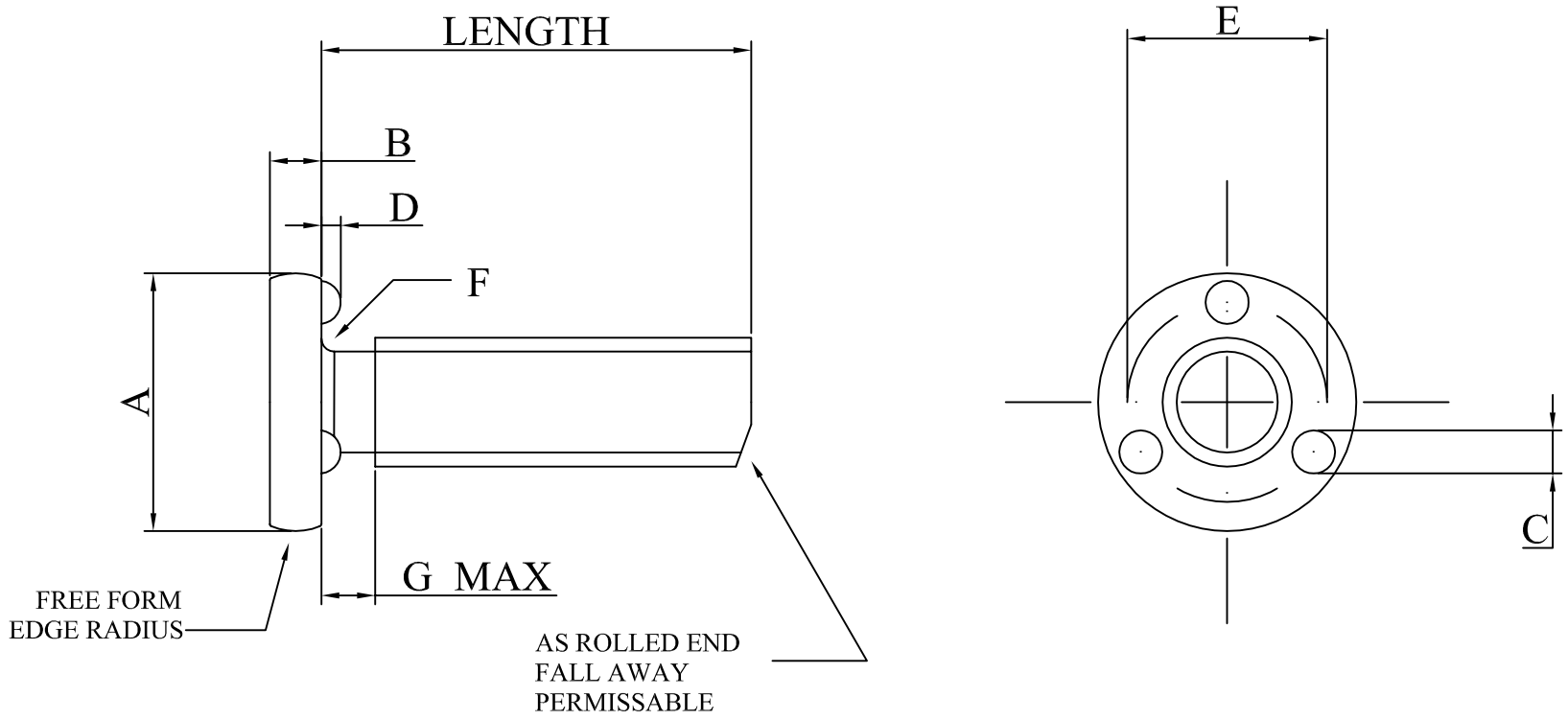

THREADS TO BS.3642 CLASS 6g FIT

	M4	M5	M6	M8	M10	M12	M16
G	1.75	2.0	2.5	3.13	3.75	4.38	5.00

3RD ANGLE PROJECTION

CONFIDENTIAL

THIS DRAWING IS THE PROPERTY OF BLAKEACRE LTD AND MUST NOT BE COPIED OR DISCLOSED TO A THIRD PARTY WITHOUT THEIR CONSENT.

© BLAKEACRE LTD

All Dimensions in Millimetres	All Diameters To Be Concentric		If In Doubt Ask			
			Part No.		Drawn By.	
			Drawing No.		Scale	Do Not Scale
			Description		Gen. Tol.	See Individual Dims.
1			Material		BLAKEACRE LTD	
Issue No.	Revision Details	Date	Finish			